REVISIONS				
REV	DESCRIPTION	ECO #	DATE	APPROVED
-	INITIAL RELEASE	XXXX	5/30/12	T. KUHN
A	INITIAL RELEASE	XXXX	10/19/12	T. KUHN

ELECTRICAL

FREQUENCY RANGE	DC - 6 GHz, 12.4 GHz & 18 GHz		
AVAILABLE dB VALUES	1-10, 20, 30, 40 & 50 dB		
ATTENUATION ACCURACY*	DC-6GHz	6-12.4GHz	12.4-18GHz
3 & 6 dB	±0.5 dB	±0.75 dB	±1.00 dB
10 & 20 dB	±0.5 dB	±0.75 dB	±1.25 dB
30 dB	±0.75 dB	±1.00 dB	±1.50 dB
40 dB	±1.00 dB	±1.25 dB	±1.50 dB
50 dB	±1.25 dB	NA	NA

VSWR*

DC - 6 GHz	1.30:1 MAX
6 - 12.4 GHz	1.45:1 MAX
12.4 - 18 GHz	1.60:1 MAX

INPUT POWER	25 WATTS AVG. @ 25°C DERATED LINEARLY TO 10 WATTS @ 125°C
PEAK POWER	500 WATTS (5µSec PULSE, 0.05% DUTY CYCLE)
IMPEDANCE	50 OHMS
OPERATING TEMP RANGE	-65°C TO +125°C

*WHEN BOTH PORTS ARE MATED WITH A CONNECTOR FROM TABLE 1

MECHANICAL

CONDUCTORS	GOLD PLATED BERYLLIUM COPPER
HOUSING	BLACK ANODIZED ALUMINUM

ORDERING INFORMATION

TO DESIGNATE MAX FREQUENCY REPLACE "-FQ" WITH:
'-06" = 6 GHz; "-12" = 12.4 GHz; "-18" = 18 GHz

TO DESIGNATE dB VALUE REPLACE "-DB" WITH:
"-03" = 3 dB; "-10" = 10 dB; "-20" = 20 dB

TABLE 1

SMA MALE	AD20-9901-02
SMA FEMALE	AD20-9801-02
TYPE N MALE	AD30-9901-02
TYPE N FEMALE	AD30-9801-02
TNC MALE	AD31-9901-02
TNC FEMALE	AD31-9801-02
7/16 MALE	AD76-9901-02**
7/16 FEMALE	AD76-9801-02**

** 8 GHz MAX.

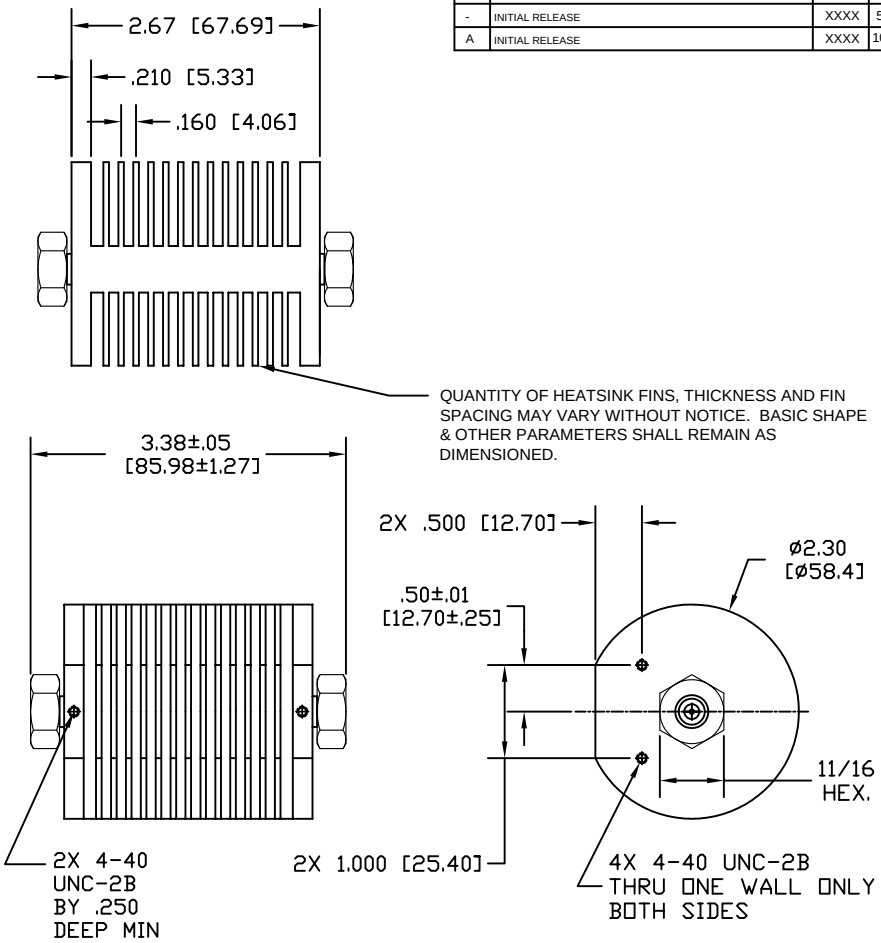

NOTES:

UNIT IS BIDIRECTIONAL.

50 dB UNIT IS AVAILABLE TO 6GHz ONLY.

DRAWING PRACTICES PER ANSI-Y-14.5
MIL-STD-100 & 1000
DIMENSIONS ARE IN INCHES AND APPLY BEFORE/AFTER PROCESSING
SURFACE ROUGHNESS (INCHES) 63
FINISH: SEE NOTES
MATERIAL: SEE NOTES
NOTE: THIS DRAWING INCORPORATES THIRD ANGLE PROJECTION.
INTERPRET IAW ANSI Y14.5-1982

UNLESS OTHERWISE SPECIFIED TOLERANCES IN:

DECIMALS	INCH	(MM)
.X"	.05"	[.76]
.XX"	.030"	[.25]
.XXX"	.010	[.127]

ANGLES ±0°30'
REMOVE ALL BURRS/SHARP W/ BREAK / R OF .003" TO .0005"
UNLESS OTHERWISE NOTED DIAS CONCENTRIC <.003 T.I.R.

DO NOT SCALE PRINT

	DATE
DRAWN: T. MAIN	11/30/12
CHECKED: D. SAUNDERS	5/30/12
ENG APPR.: T. KUHN	5/30/12

THESE DRAWINGS AND SPECIFICATIONS ARE THE PROPERTY OF XMA CORP. OR OMNI SPECTRA AND SHALL NOT BE REPRODUCED, COPIED NOR USED - IN WHOLE OR IN PART - AS A BASIS FOR THE MANUFACTURE OR SALE OF OTHER ITEMS WITHOUT THE EXPRESS WRITTEN PERMISSION OF XMA CORP.

XMA Powered by: Omni Spectra®
Phone:603-222-2256 Fax:603-222-2259
150 Dow Street, Manchester, NH 03101

TITLE: OUTLINE DRAWING, ADAPTENUATOR, 25 W, DC - 18GHz

SIZE	CAGE CODE	DRAWING NUMBER	REV
C	3HT76	AD80-6525-FQ-DB	A

SCALE 1:1 | PLATED AREA SQ. IN XXX | SHEET 1 OF 1

TEMPLATE REV -